QUARK

精 准　高 效　可 靠

Precise efficient and reliable

QUARK
高精密喷射点胶系统

High-precision jet glue dispensing system

QUARK

Dot V10B压电阀

Dot V10B Piezo valve

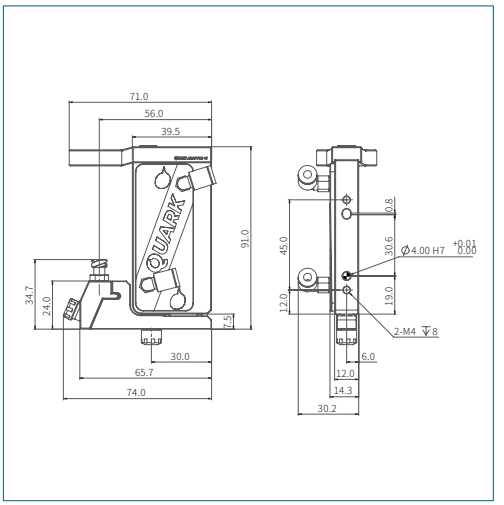

技术参数	
型号	Dot V10B
外形尺寸(mm)	99*73.9*14.5
驱动方式	压电驱动
最大喷射速度(Hz)	1000
最小喷射量(nl)	1.0
精度	±1%
软体校准	自动
粘度范围	1-200000mPas
气压范围(Mpa)	0-0.7
电源(V)	220 AC

Technical Parameters	
Model	Dot V10B
Boundary dimensions(mm)	99*73.9*14.5
Drive mode	Piezoelectric drive
The maximum jet speed(Hz)	1000
Minimum jet dose (nl)	1.0
Precision	±1%
Flexible calibration	Automate
Viscosity range	1-200000mPas
Pneumatic range (Mpa)	0-0.7
Power source (V)	220 AC

- 耗材少、价格经济，维护保养方便
  Less material consumption, lower price, and more convenient maintenance
- 压电陶瓷使用寿命长，不低于4亿次点胶喷射
  Longer service life of piezoelectric ceramics, 0.4 billion times of glue jet or more
- 高速度：最大喷射速度1000次/秒
  High speed: the maximum jet speed of 1000 times/s
- 高精度：胶点尺寸始终保持一致，体积误差±1%以内
  High precision: consistent glue dot sizes with the volume error within ±1%
- 最小线宽0.2mm，最小点径0.2mm
  Minimum line width of 0.2mm, and minimum spot size of 0.2mm
- 压电式驱动，切换速度快，可软体校准
  Piezoelectric drive, quick switching speed and flexible calibration
- 采用快拆式喷嘴、撞针设计，拆卸方便
  Quick-demountable nozzle and firing pin for easy disassembly
- 消除Z轴的移动，可提高移动效率
  Elimination of Z-axis movement for higher movement efficiency
- 非接触式喷胶，点胶速度快
  Non-contact jet for faster glue dispensing

应用领域

APPLICATION FIELDS

扬声器组装，光伏电池板，屏幕模组，摄像头模组，FPC软板加固，SMT，PCBA填充，底部填充，服装内衣等

Loudspeaker assembly, photovoltaic cell panel, screen module, camera module, FPC flexible board reinforcement,SMT, PCBA filling, underfill, clothing, underwear, etc.

适用胶水

APPLICABLE GLUES

塔菲胶，导电银胶，SMT红胶，UV胶，Underfill胶，Dam胶，Fill胶等

Tuffy glue, conductive silver adhesive, SMT red glue, UV glue, Underfill glue, Dam glue, Fill glue, etc.

QUARK

Dot C10C 控制器

Dot C10C controller

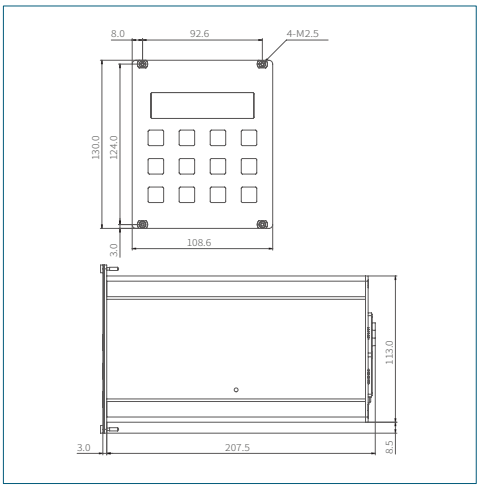

技术参数	
型号	Dot C10C
外形尺寸(mm)	108.6x130 x205
重量(g)	1700
运行模式	打点模式(Points)
	脉冲模式(Pulse)
	电平模式(Level)
	排胶模式(Glue)
	划线模式(Line)
参数储存	20组
标准接口	RS232,PLC接口
电源(V)	220 AC

Technical Parameters	
Model	Dot C10C
Boundary dimensions(mm)	108.6x130 x205
Weight (g)	1700
Operation mode	Dotting mode (Points)
	Pulse mode (Pulse)
	Electrical valve mode (Level)
	Glue mode
	Line mode
Parameter storage	20 sets
Standard interface	RS232,PLC interface
Power source (V)	220 AC

- RS232实现设备互联
  RS232 for interconnection of equipment
- 内部参数可存储20组
  Storage capability of 20 sets of internal parameters
- 实时监控胶阀压电温度
  Real-time monitoring over glue valve piezoelectric temperature
- 更先进的胶阀控制逻辑，稳定性更强
  More sophisticated glue valve control logic, and higher stability
- 可精准调节压电模块、上升/下降/开胶/延时/电压
  Precise adjustment of piezoelectric module, rising/falling/glue dispensing/delay/electric pressure
- 运行模式多样化，可灵活调整，满足不同客户需求
  Various operation modes of rising/falling/, and flexible regulation for meeting various requirements
- 控制器实时监控适用寿命运行，数字化显示，界面更简洁
  Controller for real-time monitoring over service life, digital display and more simple interface
- 上升/下降速度平稳，有利于延长压电陶瓷寿命，使点胶效果更好
  Stable rising/falling speed for prolonging service life of piezoelectric ceramics and improving glue dispensing effect

产品优势

PRODUCT ADVANTAGES

- 可对胶阀进行稳定、精准控制，稳定可靠，操作简单
- 进一步优化控制器抗干扰、耐老化能力，适用环境更广泛
- 功能性强，拥有多种实用功能
- 更先进的胶阀控制逻辑，稳定性更强

- Stable and precise control of glue valve, stability and reliability, and easy operation
- Further optimization of anti-interference and anti-aging capability of controller, wider applicable environment
- Higher functionality, and multiple practical functions
- More sophisticated glue valve control logic, and higher stability

QUARK PRODUCTS INDUSTRY APPLICATION

QUARK产品行业应用

屏显行业银胶打点，胶宽稳定≤0.40mm

Silver adhesive pointing for screen display industry, with glue width kept ≦0.40mm

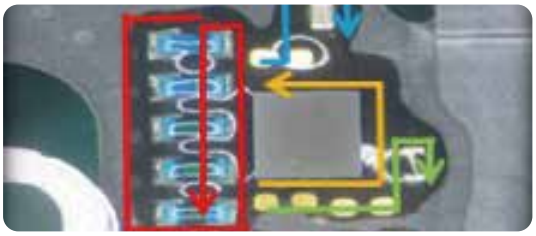

表面涂覆，胶线稳定＜0.55mm

Surface coating, with glue line kept <0.55mm

LED半导体透镜打点尺寸稳定3.95-4.0mm之间，厚度1.45-1.5mm

LED semi-conductor lens point sizes kept within 3.95-4.0mm and thickness 1.45-1.5mm

导电银胶，线宽稳定0.30-0.40mm

Conductive silver adhesive with line width kept within 0.30-0.40mm

QUARK PRODUCTS INDUSTRY APPLICATION

QUARK产品行业应用

Dam 围坝线宽稳定0.35-0.45mm

Dam line width kept within 0.35-0.45mm

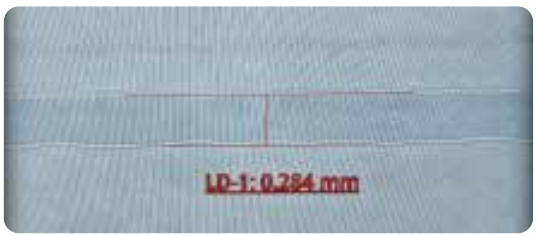

Tuffy胶，稳定线宽0.20-0.35mm

Tuffy glue with line width kept 0.20-0.35mm

热熔胶宽0.3-0.35mm
高度0.3-0.35mm

Hot-melt glue width width 0.30-0.35mm and height 0.3-0.35mm

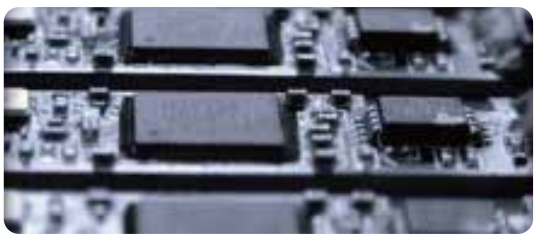

元器件封边，线宽稳定0.30-0.40mm

Component edge banding with line width kept within 0.30-0.40mm