www.jbctools.com

INSTRUCTION MANUAL

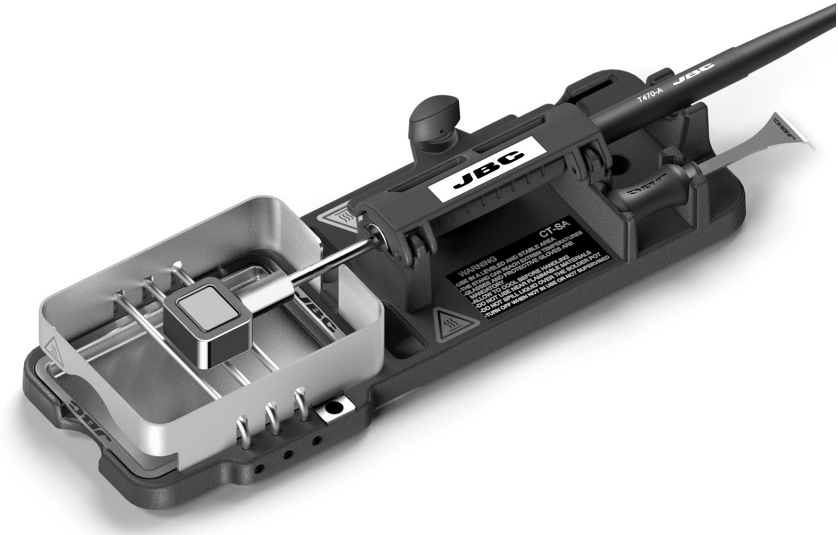

CTS

Solder Pot Stand

This manual corresponds to the following reference:

CT-SA

Packing List

The following items are included:

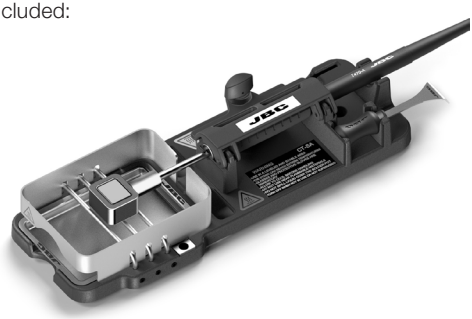

Solder Pot Stand .....1 unit
Handle and Cartridge are not included

Spatula 17mm / 0.67in ..... 1 unit
Ref. 0018606

Spatula 39mm / 1.54in ..... 1 unit
Ref. 0018607

Spacers ..... 1 pair
Ref. 0029883

Allen Key Ø 2mm / 0.08in ..... 1 unit
already assembled to the stand

Tray ..... 1 unit
already assembled to the stand

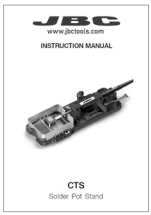

Manual ..... 1 unit
Ref. 0029403

Features

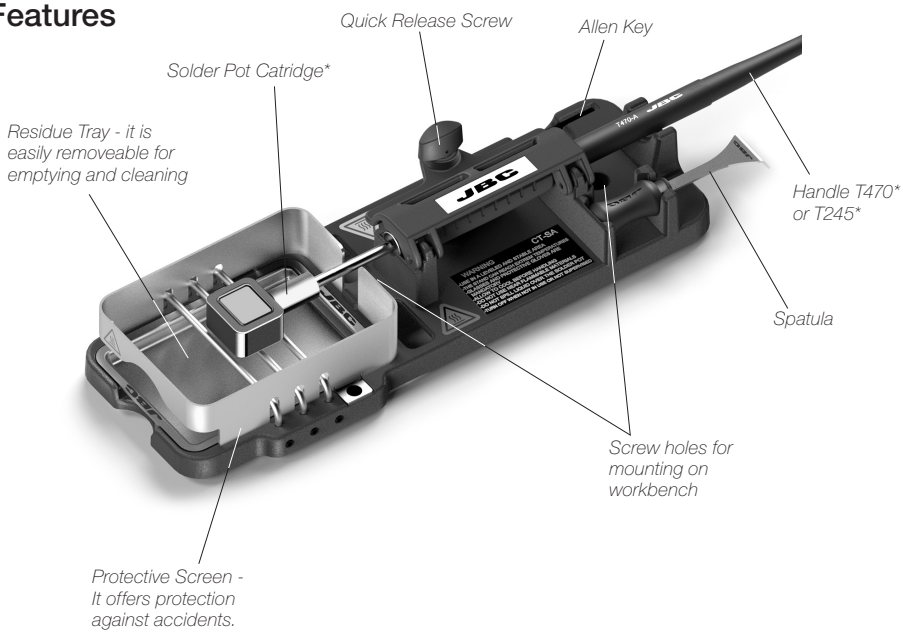

Compatible Cartridges*

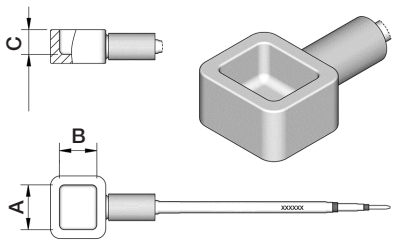

CTS can be employed with different handles and cartridges.

T470 handles can be used with solder pot cartridges C470SP01 and C470SP42 and T245 handles with solder pot cartridge C245SP01.

Handle Range	Cartridge Ref.	A	B	C
T470	C470-SP01	18 mm 0,710 in	15 mm 0.591 in	10 mm 0.394 in
T470	C470-SP42	40 mm 1.575 in	40 mm 1.575 in	10 mm 0.394 in
T245	C245-SP01	18 mm 0,710 in	15 mm 0.591 in	10 mm 0.394 in

*not includes, sold separately

Operation

CTS Solder Pot Cartridge Stand can hold **T245 or T470 handles with its Solder Pot Cartridge** to avoid it tipping over accidentally. Compatible Cartridges see previous page.

As a safety precaution, before placing the handle, make sure the station is off and the tin is cold.

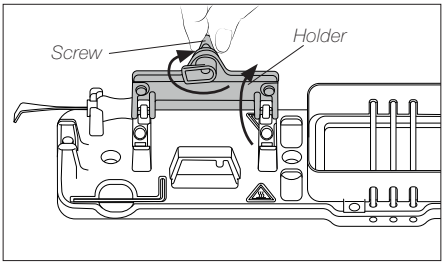

1. Unlock the screw and open the holder.

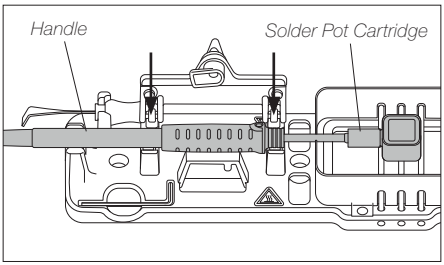

2. Place the handle with its solder pot cartridge previously inserted. Be careful to position it correctly.

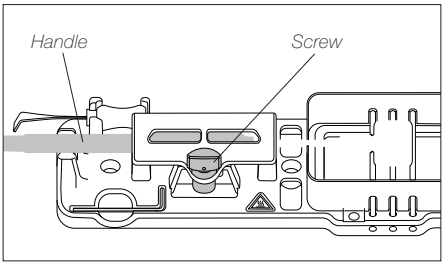

3. Once in place, lock the screw and connect the handle to the stand.

Optional: To save space at the workbench, the handles can be connected directly to JBC's control units via the CHB converter without the need for a tool stand.

- Do not melt "flux core solder wire".

- Recommended temperatures for fine wires (up to AWG 24 aprox) and lead free solder is 300 ºC. For thicker wires, increase the temperature as necessary, but keep it always at the minimum possible.

Fixing CTS to Workbench

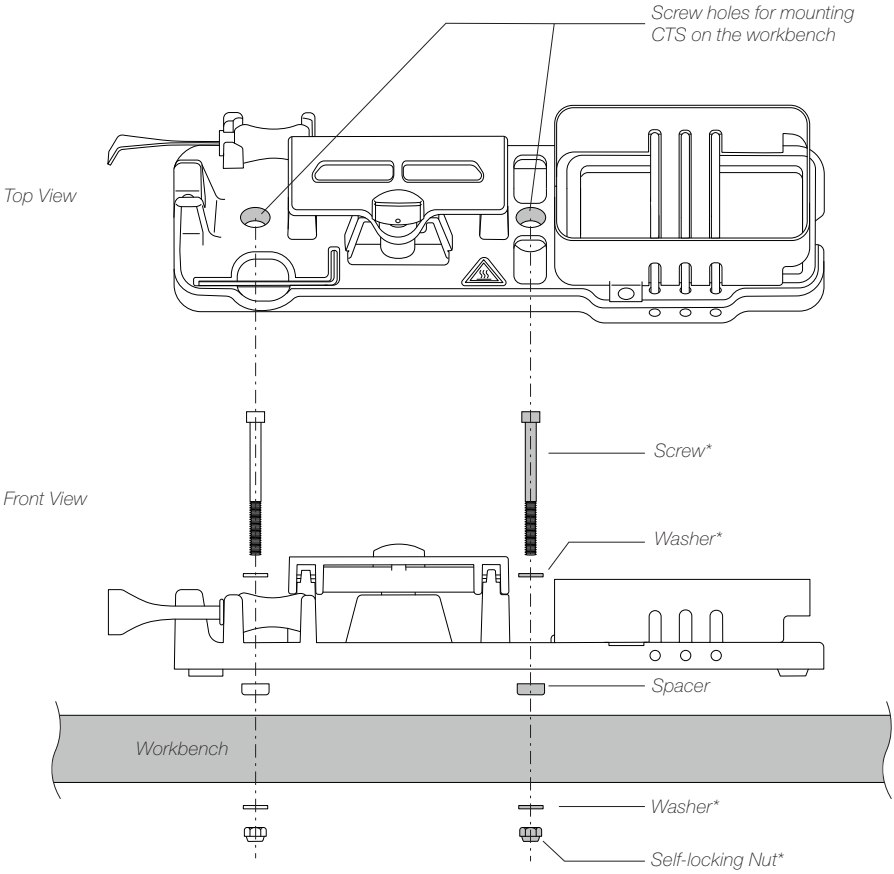

To protect the stand's rubber feets from wear and tear when fixing CTS in place put the spacers (see packing list) between the stand and the workbench.

Use screws (we recommend M4), washers and self-locking nuts to assemble and fix the CTS in place. Check that it is stable and level.

**Screws, washers and the self-locking nuts are not included.*

Spatulas

Use the spatula to eliminate the dross (Oxide and other contaminants that form on the surface of molten solder)

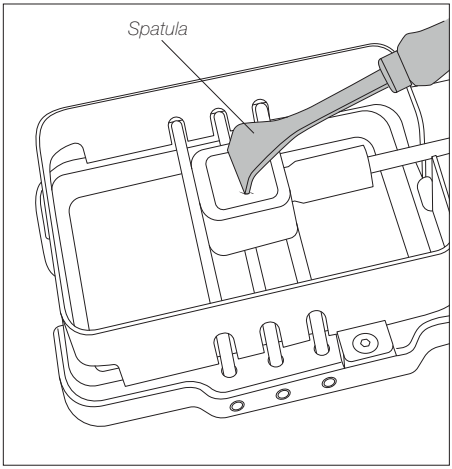

Maintenance

- Allow to cool the device down before carrying out maintenance or storage.

- Always unplug the handle from the station and remove it from the stand.

- Use a damp cloth to clean the tray and the protective screen. Alcohol can only be used for cleaning the metal parts.
  For easier cleaning, the protective screen can be disassembled by means of the allen key.

- Replace any defective or damaged parts. Use original JBC spare parts only.

- Repairs should only be performed by a JBC authorized technical service.

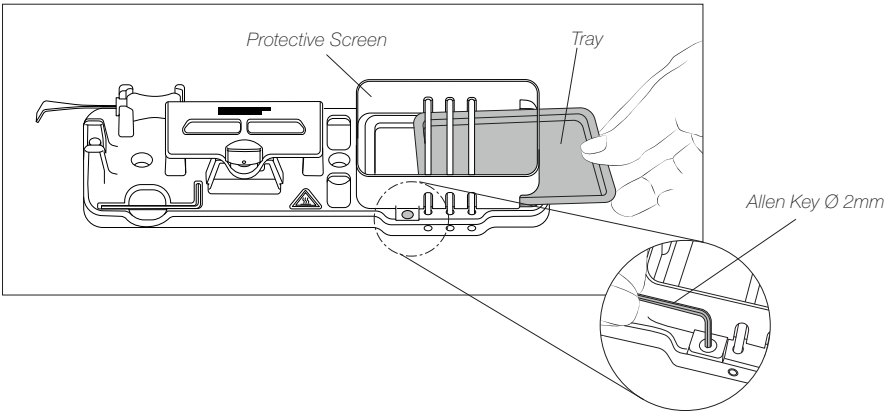

Safety

It is imperative to follow safety guidelines to prevent electric shock, injury, fire or explosion.

- Do not use the appliance for any other purpose than to hold the solder pot. It is not a tool stand.

- Do not use the equipment in environments with risk of fire or explosion.

- Allow to cool down before handling.

- Before inserting the cartridge, turn off the station. If T470 is used, insert the cartridge and tighten the screw to fix the cartridge inside the handle.

- Use on a level and stable surface.

- The stand can reach extreme hot temperatures. Protective glasses and gloves are recommended.

- Do not melt “flux core solder”.

- Do not leave the appliance unattended when it is on. Turn off when not in use or not supervised.

- Do not use next to flamable materials.

- Do not spill liquid into the solder pot.

- Utmost care must be taken with liquid tin waste which can cause severe burns.

- Keep your workplace clean and tidy.

- Be careful with the fumes produced when soldering. The use of fume extractors is recommended.

- This appliance can be used by children aged from 8 years and above and persons with reduced physical, sensory or mental capabilities or lack of experience and knowledge if they have been given supervision or instruction concerning use of the appliance in a safe way and understand the hazards involved. Children must not play with the appliance. Cleaning and user maintenance must not be carried out by children without supervision.

- Maintenance must not be carried out by children unless supervised.

Specifications

CTS
Solder Pot Stand
Ref. **CT-SA**

- Product Dimensions (aprox.): (L x W)	92 x 48 mm 3.62 x 1.89 in
- Net Weight:	999 g / 2.20 lb
- Package Dimensions and Weight: (L x H x W)	342 x 155 x 120 mm / 1313 g 13.46 x 6.10 x 4.72 mm / 2.89 lb

Complies with CE standards.
ESD safe.

Warranty
JBC's 2 year warranty covers this equipment against all manufacturing defects, including the replacement of defective parts and labour.
Warranty does not cover product wear or misuse.
In order for the warranty to be valid, equipment must be returned, postage paid, to the dealer where it was purchased.

This product should not be thrown in the garbage.
In accordance with the European directive 2012/19/EU, electronic equipment at the end of its life must be collected and returned to an authorized recycling facility.

www.jbctools.com

0029403-121223