Armor Chart

Curing

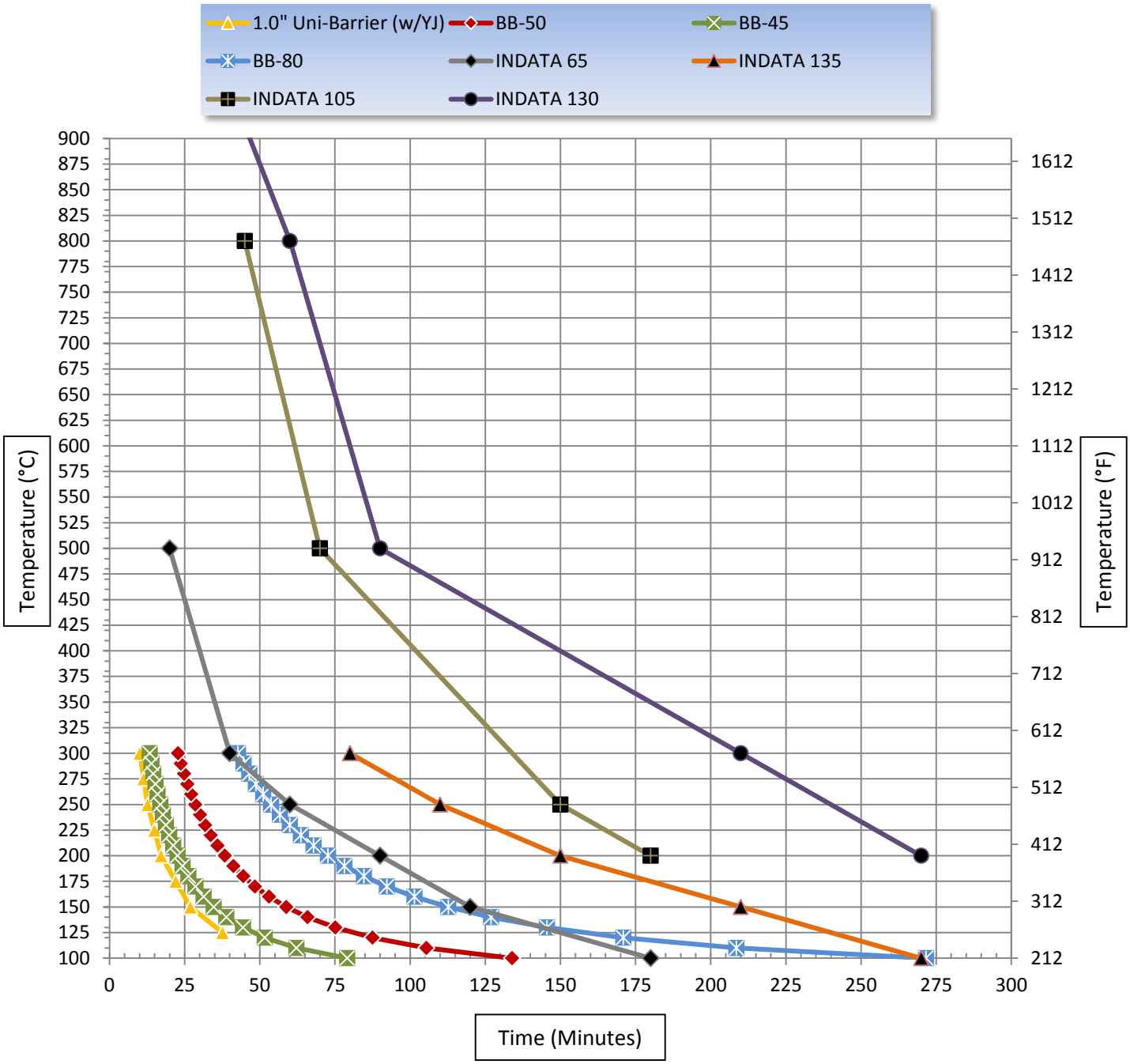

Armor Chart

Curing

1" Uni-Barrer & Yellow Jacket (ECD P/N: E42-0901-80)					
Temperature:	125°C [257°F]	150°C [302°F]	200°C [392°F]	250°C [482°F]	300°C [572°F]
Duration time (w/Jacket):	37.6 min.	26.9 min.	17.2 min.	12.7 min.	10.1 min.

BB-45 (ECD P/N: E44-4245-80)					
Temperature:	100°C [212°F]	150°C [302°F]	200°C [392°F]	250°C [482°F]	300°C [572°F]
Duration time:	79 min.	35 min.	23 min.	17 min.	13 min.

BB-50 (ECD P/N: E52-2253-80)					
Temperature:	100°C [212°F]	150°C [302°F]	200°C [392°F]	250°C [482°F]	300°C [572°F]
Duration time:	134 min.	59 min.	38 min.	29 min.	23 min.

BB-80 (ECD P/N: E54-0915-80)					
Temperature:	100°C [212°F]	150°C [302°F]	200°C [392°F]	250°C [482°F]	300°C [572°F]
Duration time:	271 min.	113 min.	73 min.	54 min.	43 min.

INDATA 65 (ECD P/N: E31-0908-80)						
Temperature:	100°C [212°F]	150°C [302°F]	200°C [392°F]	250°C [482°F]	300°C [572°F]	500°C [932°F]
Duration time:	180 min.	120 min.	90 min.	60 min.	40 min.	20 min.

INDATA 135 (ECD P/N: E31-0907-80)					
Temperature:	100°C [212°F]	150°C [302°F]	200°C [392°F]	250°C [482°F]	300°C [572°F]
Duration time:	4.5 hours	3.5 hours	2.5 hours	110 min.	80 min.

INDATA 105 (ECD P/N: E31-0918-80)				
Temperature:	200°C [392°F]	250°C [482°F]	500°C [932°F]	800°C [1472°F]
Duration time:	3.0 hours	2.5 hours	70 min.	45 min.

INDATA 130 (ECD P/N: E31-0905-80)					
Temperature:	200°C [392°F]	300°C [572°F]	500°C [932°F]	800°C [1472°F]	950°C [1742°F]
Duration time:	4.5 hours	3.5 hours	90 min.	60 min.	40 min.

Thermal Barrier Datasheet
1.0" Uni-Barrier & Yellow Jacket
ECD P/N: E42-0901-80

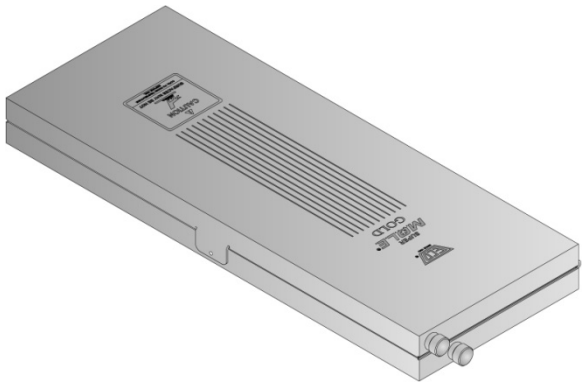

M.O.L.E.® Thermal Barrier
(Part Number: E42-0901-80)

M.O.L.E.® Thermal Barrier w/Yellow Jacket
(Part Number: E44-0944-80)

	Height:	Width:	Length:	Weight:
Barrier Dimensions:	25.4mm [1.0“]	104mm [4.1“]	269.7mm [10.62“]	0.88kg [1lbs 15oz]
Yellow Jacket Dimensions:	32.5mm [1.28”]	115mm [4.53”]	286.5mm [11.28”]	0.05kg [0.1lbs]

Figure 1 – External View

Figure 2 – Internal View

Thermal Barrier Datasheet
BB-45
ECD P/N: E44-4245-80

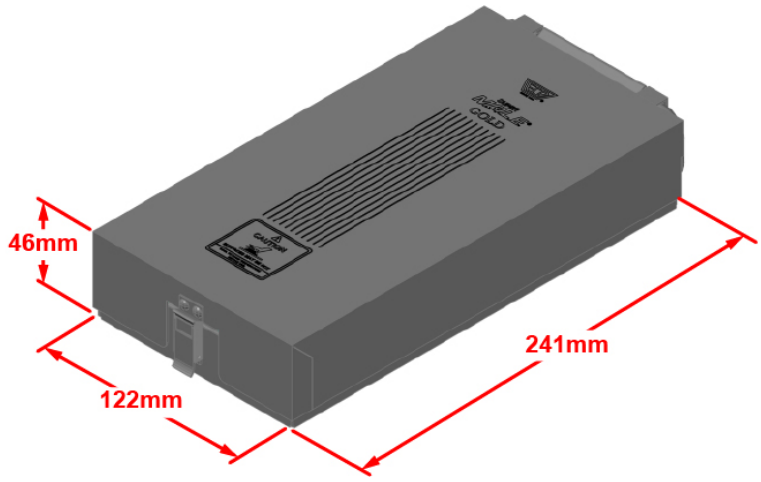

Barrier Dimensions:	Height:	Width:	Length:	Weight:
	46mm [1.82“]	122mm [4.80“]	241mm [9.5“]	1.47kg [3.25lbs]

Figure 1 – External View

Figure 2 – Internal View

Thermal Barrier Datasheet
BB-50
ECD P/N: E52-2253-80

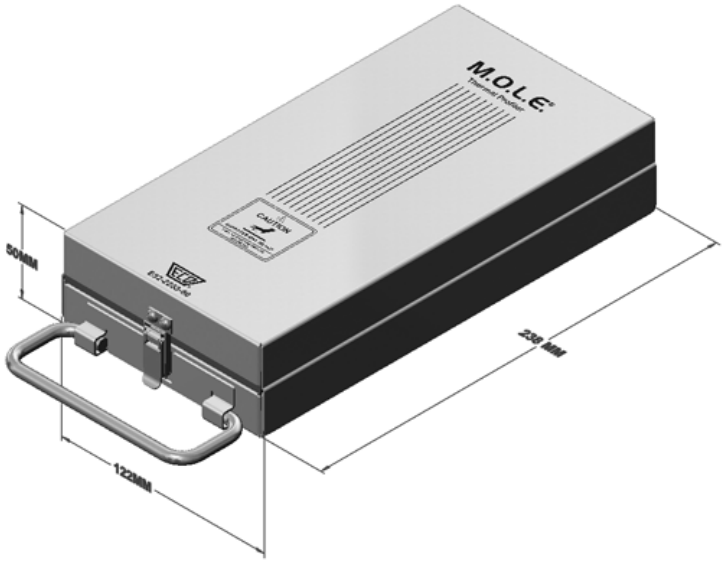

Barrier Dimensions:	Height:	Width:	Length:	Weight:
	49mm [1.93“]	122mm [4.80“]	238mm [9.37“]	2.38kg [5.25lbs]

Figure 1 – External View

Figure 2 – Internal View

Thermal Barrier Datasheet
BB-80
ECD P/N: E54-0915-80

Barrier Dimensions:	Height:	Width:	Length:	Weight:
	80mm [3.15”]	123mm [4.7”]	236mm [9.3”]	4.1kg [8.95 lbs]

Figure 1 – External View

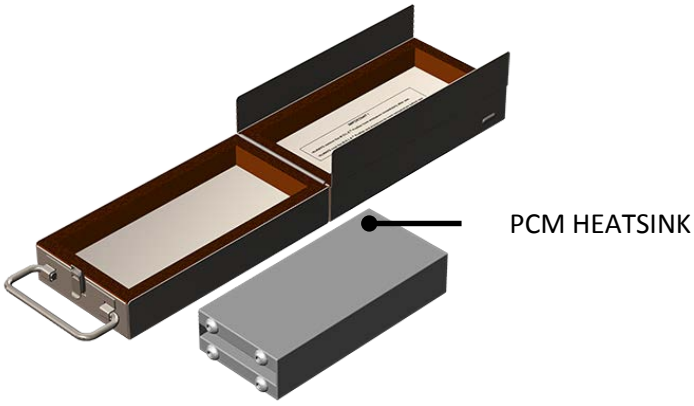

Figure 2 –Internal View

Thermal Barrier Datasheet
INDATA® 65
ECD P/N: E31-0908-80

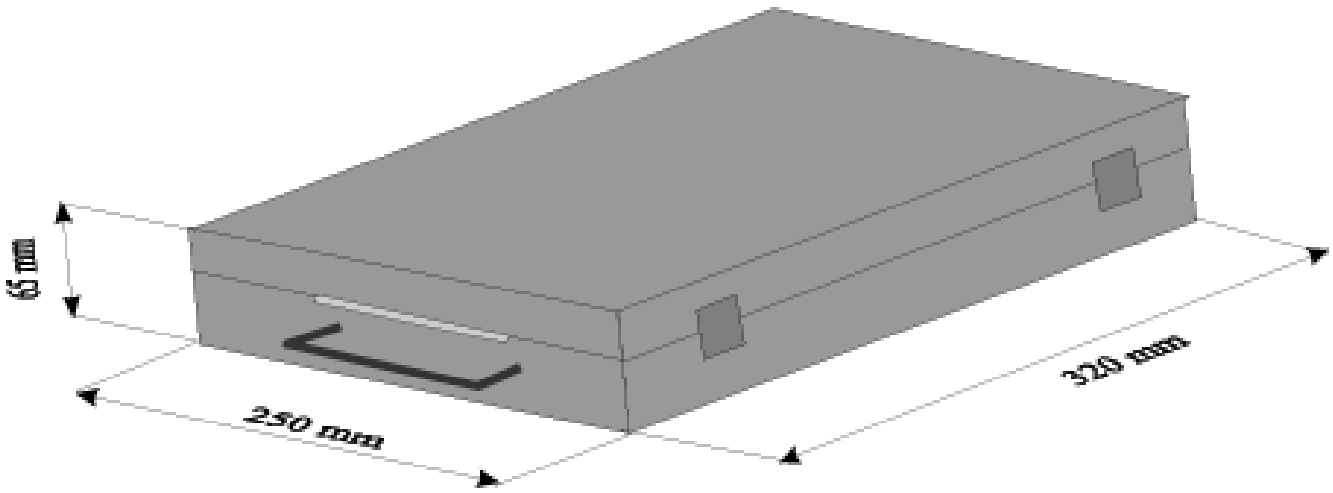

Barrier Dimensions:	Height:	Width:	Length:	Weight:
	65mm [2.6“]	250mm [9.8“]	320mm [12.6“]	9kg [19.84lbs]

Figure 1 – Internal View

Thermal Barrier Datasheet
INDATA® 135
ECD P/N: E31-0907-80

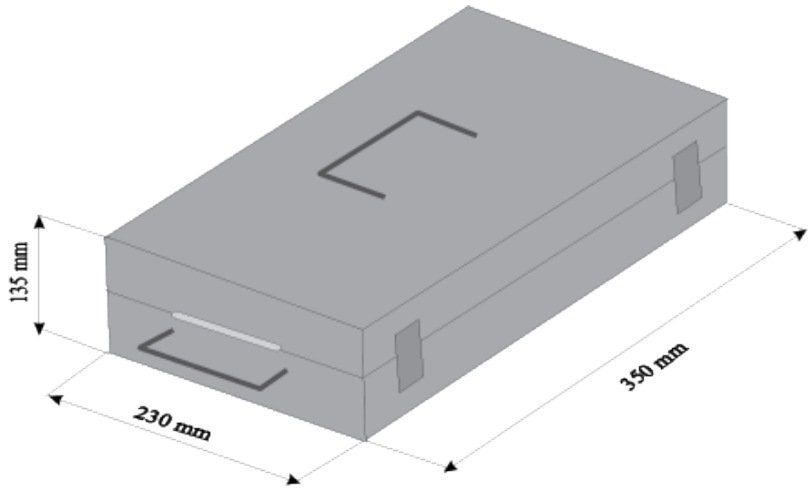

Barrier Dimensions:	Height:	Width:	Length:	Weight:
	135 mm [5.31“]	230mm [9.05“]	450mm [17.72“]	9.5kg [20.94lbs]

Figure 1 - Internal View

Thermal Barrier Datasheet
INDATA® 105
ECD P/N: E31-0918-80

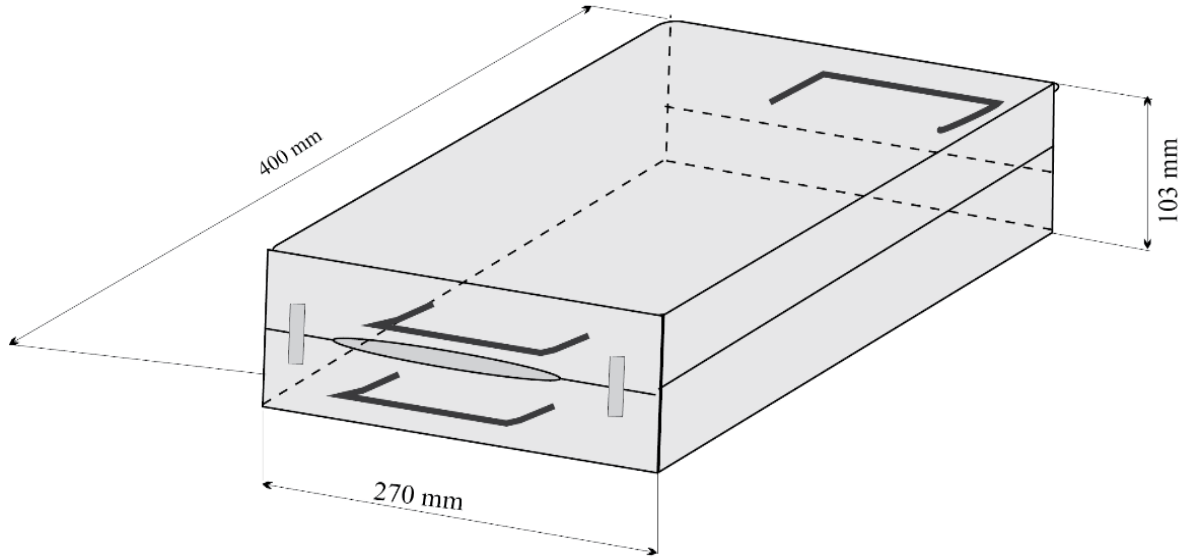

Barrier Dimensions:	Height:	Width:	Length:	Weight:
	103mm [4.06“]	270mm [10.63“]	400mm [15.75“]	12kg [26.46lbs]

Thermal Barrier Datasheet
INDATA® 130
ECD P/N: E31-0905-80

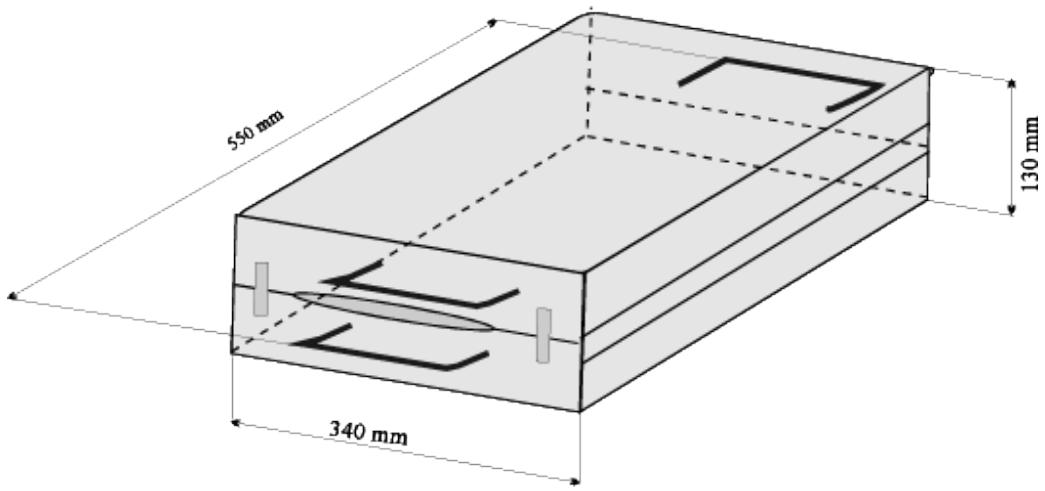

Barrier Dimensions:	Height:	Width:	Length:	Weight:
	130 mm [5.12“]	340mm [13.39“]	550mm [21.65“]	21kg [46.30lbs]

Figure 1 – External View

Figure 2 – Internal View